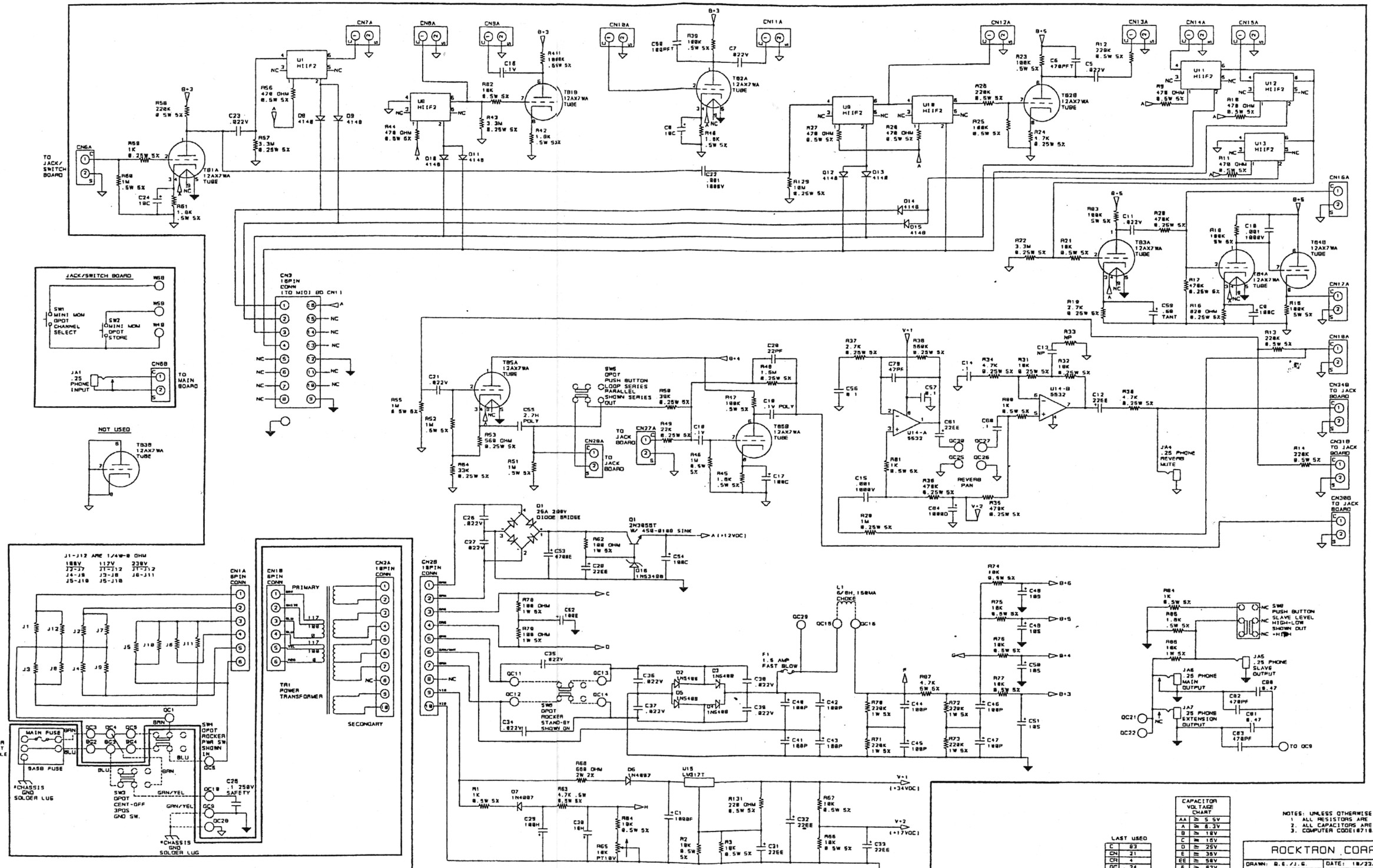

LAST USED	
C	83
CN	21
CR	4
OC	24
R	129
SW	11
U	15
VR	21
W	9

CAPACITOR VOLTAGE CHART	
AA	≥ 5.5V
A	≥ 6.3V
B	≥ 10V
C	≥ 15V
D	≥ 25V
E	≥ 35V
EE	≥ 50V
F	≥ 63V
G	≥ 80V
H	≥ 100V
M	≥ 250V
P	≥ 350V
S	≥ 450V
T	≥ 500V
V	≥ 630V
Z	≥ 1000V

NOTES: UNLESS OTHERWISE SPECIFIED
1. ALL RESISTORS ARE 1/2W 5%
2. ALL CAPACITORS ARE IN MICROFARADS
3. COMPUTER CODE(0716298)

ROCKTRON CORPORATION

DRAWN: B.E./J.G.	DATE: 10/23/97	SCALE: N.T.
CHECK:	CHECK:	REVISED: 3/13
ENGR:	NO INFORMATION GIVEN HEREIN MAY B DISCLOSED TO OTHERS WITHOUT PERMISSION FROM ROCKTRON CORPORAT	
APPR:		

EGNATER 100W

DRAWING NUMBER 071-0296

SHEET 1 OF 2
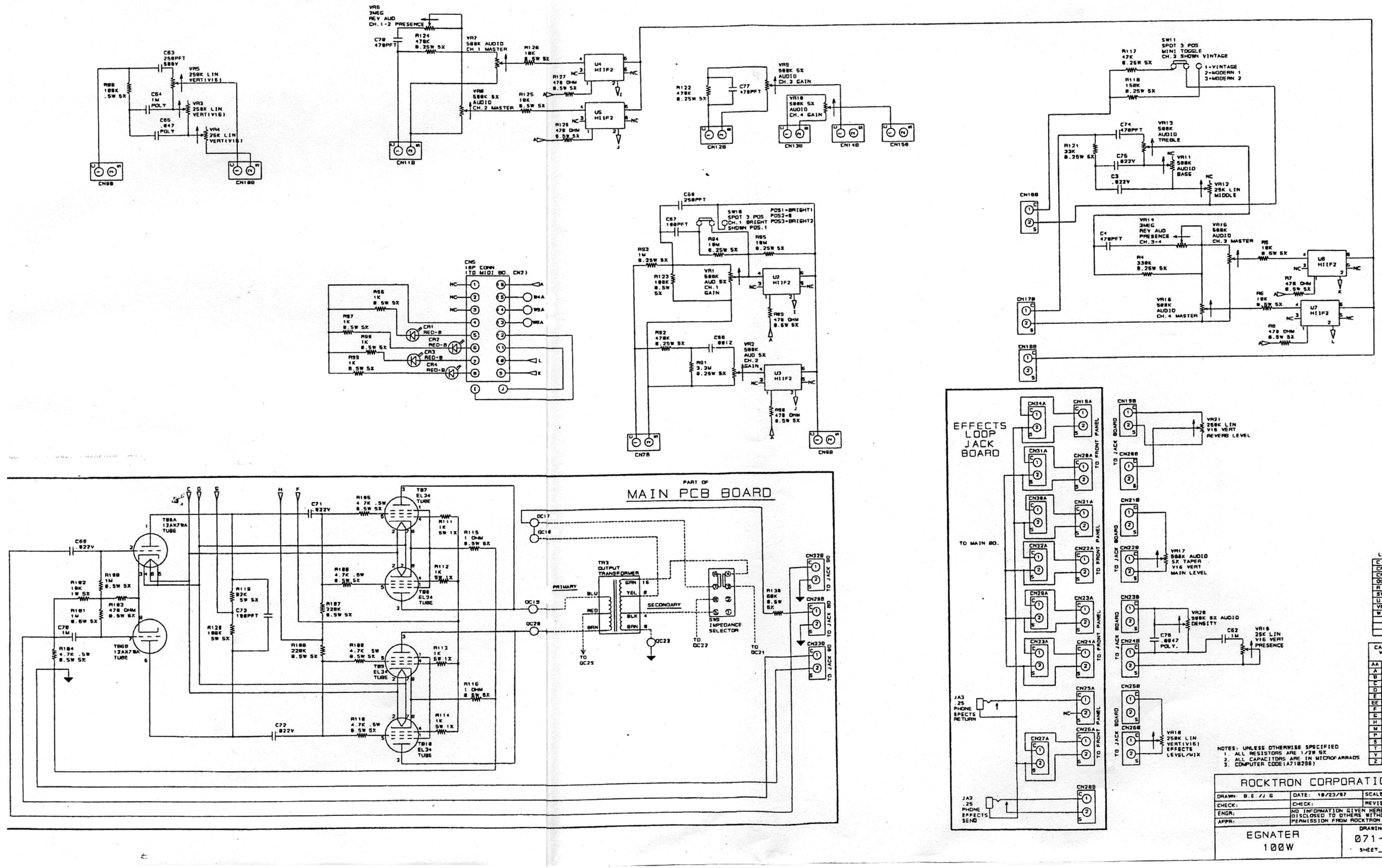
SION	#	DATE	APPR.
ER ECN #8485.			
32 WERE 47K, ARE NOW 18K			
WAS 47K, IS NOW 22K	A	3/13/98	J W
WAS 68K, IS NOW 39K			
WAS 47K, IS NOW 560K			
WAS 22BK, IS NOW 1 MEG			
WAS .47, IS NOW .1